ADENTECH

# HEAT PUMPS & AIR CONDITONING

## ON-DEMAND ELECTRONIC SUPPLIER

DC Inverter Driver Specification

变频驱动规格书

三相 12HP 变频驱动

DC Inverter Driver Three Phase 12HP

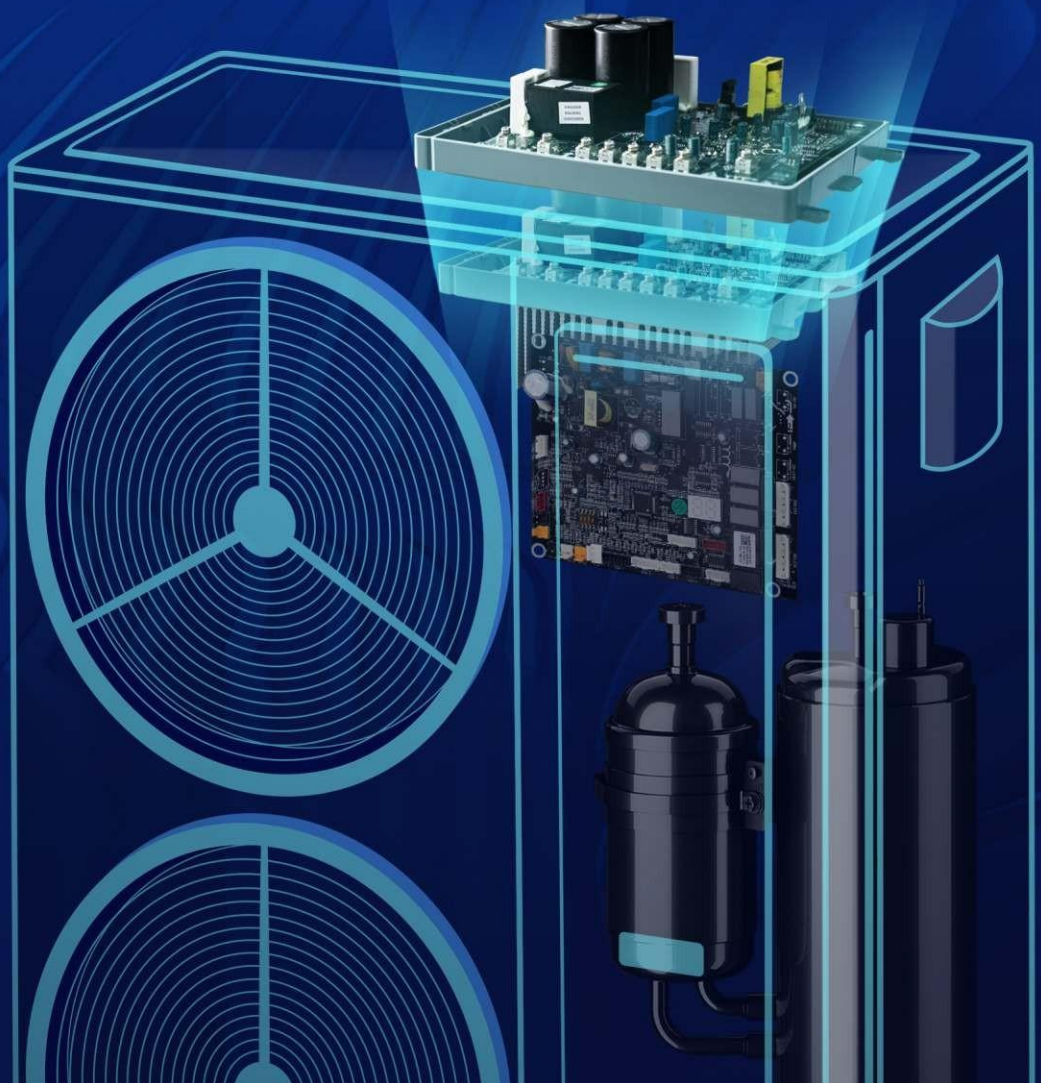

# DC INVERTER DRIVER SPECIFICATION

## 变频驱动规格书

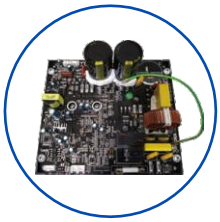

单相 2HP 变频驱动

DC Inverter Driver Single Phase 2HP

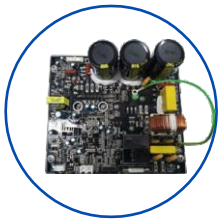

单相 3HP 变频驱动

DC Inverter Driver Single Phase 3HP

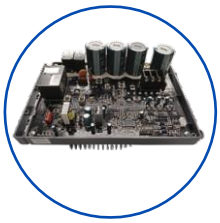

单相 6HP 变频驱动

DC Inverter Driver Single Phase 6HP



三相 10HP 变频驱动

DC Inverter Driver Three Phase 10HP



三相 16HP 变频驱动

DC Inverter Driver Three Phase 16HP



单相 4HP 变频驱动

DC Inverter Driver Single Phase 4HP



三相 7HP 变频驱动

DC Inverter Driver Three Phase 7HP



三相 12HP 变频驱动

DC Inverter Driver Three Phase 12-15HP



三相 20HP 变频驱动

DC Inverter Driver Three Phase 20HP

# 变频驱动规格书

# DC Inverter Driver Specification

| | |
|---|---|
| **产品名称<br>Product name** | **三相 12HP 变频驱动<br>DC Inverter Driver Three Phase 12HP** |
| **产品型号<br>Product model** | **BSQ280B1F2\BSQ280B4\BSQ280B1Y1** |
| **版本号<br>Version number** | **V 1.3** |

| | | |
|---|---|---|
| 客户名称<br>Customer’ s Name | | |
| 确认意见和审核<br>Comments and checked by | 批准<br>Approved by | 盖章<br>Company’ s seal |
| | | |

| 供方审批 Approved by Supplier | | |
|---|---|---|
| 编制<br>Prepared by | 审核<br>Checked by | 批准<br>Approved by |
| 李森俊 | 尉崇刚 | 程良意 |

**珠海亚丁科技有限公司**
ZHUHAI ADEN TECHNOLOGY CO., LTD
地址 ADD：广东省珠海市唐家湾镇科技七路中电高科技产业园 4 栋 3B
Unit 3-B, Building 4, Zhongdian high tech industrial park, 7th technology road, Tangjiawan town, Xiangzhou District, Zhuhai City, Guangdong, China.
电话 Tel：0756-3628167
网址 Website：www.adentech.cn
邮箱 E-mail：sales@adentech.cn

# 更改记录 Revision record

| **版本号** Version No. | **更新日期** Date | **更改点** Revision Item | **更改目的** Change purpose | **确认人** Confirmed by |
|---|---|---|---|---|
| V1.0 | | 完成初版的编写。<br>First version. | | |
| V1.1 | 2023.12.25 | 更改驱动命名，整合风冷液冷方案一体规格书<br>Change the driver name and integrate the integrated specification book for air-cooled liquid cooling solutions | | |
| V1.2 | 2024.11.08 | 更改滤波板地线丝印<br>Change the ground wire marking of the filter board | | |
| V1.3 | 2025.5.14 | 更新logo，增加低泄漏电流滤波板，新增滤波板地线的描述包含线径、线长、端子/螺钉型号描述<br>Update logo, add low leakage current filter board, and add description of the ground wire of the filter board, including wire diameter, wire length, and terminal/screw model | | |

# 安全注意事项 Safety Information

## 安全声明 Safety Precautions

1) 在安装、操作、维护产品时，请先阅读并遵守本安全注意事项。
Please read and follow the safety precautions when installing, operating and maintaining the product.

2) 为保障人身和设备安全，在安装、操作和维护产品时，请遵循产品上标识及手册中说明的所有安全注意事项。
To ensure your safety and prevent damage to equipment, please follow the marks on the product and safety precautions in this manual when installing, operating and maintaining the product.

3) 手册中的“注意”、“警告”和“危险”事项，并不代表所应遵守的所有安全事项，只作为所有安全注意事项的补充。
"CAUTION", "WARNING", and "DANGER" items in the manual do not indicate all safety precautions that need to be followed; instead, they just supplement the safety precautions.

4) 本产品应在符合设计规格要求的环境下使用，否则可能造成故障，因未遵守相关规定引发的功能异常或部件损坏等不在产品质量保证范围之内。
Use this product in environment meeting the design and specification requirements; otherwise, a fault may occur. Noncompliance-caused malfunction or damage to parts are not covered in product quality warranty.

5) 因违规操作产品引发的人身安全事故、财产损失等，我司将不承担任何法律责任。
It is not legally responsible for any personal safety accident or property losses caused by improper operation of this product.

## 安全等级定义 Safety Grade and Definition

**⚠ 危险 DANGER**

“危险”表示如果不按规定操作，则导致死亡或严重身体伤害。

The "DANGER" indicates the improper operation, which, if not avoided, causes death or serious injury.

**⚠ 警告 WARNING**

“警告”表示如果不按规定操作，则可能导致死亡或严重身体伤害。

The "WARNING" indicates the improper operation, which, if not avoided, may cause death or serious injury.

**⚠ 注意 CAUTION**

“注意”表示如果不按规定操作，则可能导致轻微身体伤害或设备损坏。

The "CAUTION" indicates the improper operation, which, if not avoided, may cause minor injury or equipment damage.

# 安全注意事项 Safety Information

## 开箱验收 Unpacking and Checking

⚠ 注意 CAUTION

- 开箱时发现产品及产品附件有损伤、锈蚀、使用过的迹象等问题，请勿安装！
  Do not install the product and its accessories when you find that the product and its accessories have any damage or corrosion or they have been used.
- 开箱时发现产品内部进水、部件缺少或有部件损坏时，请勿安装！
  Do not install the product when there is water inside the product or any of its parts is missing or damaged.
- 请仔细对照装箱单，发现装箱单与产品名称不符时，请勿安装！
  Do not install the product when the product name is inconsistent with that in the packing list.

## 储存与运输时 During Storage and Transportation

⚠ 注意 CAUTION

- 请按照产品的储存与运输条件进行储存与运输，储存温度、湿度满足要求。
  Store and transport the product according to its storage and transportation conditions. The storage temperature and humidity shall meet relevant requirements
- 避免在水溅雨淋、阳光直射、强电场、强磁场、强烈振动等场所储存与运输。
  Do not store or transport the product in places with direct sunlight, strong electric field, strong magnetic field or strong vibration or places that are wet by rain or splashing water.
- 避免产品储存时间超过 3 个月，储存时间过长时，请进行更严密的防护和必要的检验。
  Do not store the product for over three months. Take stricter prevention measures and perform necessary inspection when the storage time is too long.

## 安装时 During Installation

⚠ 注意 CAUTION

- 驱动器工作时会产生高温，周围要留有足够的空间，确保驱动器散热。
  The driver will generate high temperature when it is working. Leave enough space around the driver to ensure the heat dissipation of the driver.
- 安装使用的环境温度要求禁止超出规格书所允许的范围；避免太阳直射。
  The ambient temperature requirements for installation and use must not exceed the range allowed in the specification; avoid direct sunlight.
- 请勿安装在潮湿、凝露的场所。
  Do not install in the places where is humid or easy condensation.
- 请勿安装在有粉尘、腐蚀性气体、爆炸性气体、易燃性气体、液体、油雾及盐腐蚀等场所。
  Do not install in the places where is dusty, corrosive gas, explosive gas, flammable gas, liquid, oil mist and salt corrosion.
- 本驱动器无外壳，安装时，请谨防掉入铁丝、铁屑、铜丝等异物，否则会因短路造成驱动器烧坏。
  This driver has no casing. Please be careful that keep the driver installed place where is not easy to drop foreign objects such as iron wire, iron filings, copper wire, etc. Otherwise, the driver will be burned due to short circuit.
- 安装时请注意参考套件清单中的驱动组件、滤波板、电抗器型号，谨防不按功率等级错误搭配使用。
  Please pay attention to the correct model of drive module, filter board and reactor in the component list during installation. Be careful not to use them incorrectly according to the power level.

- 本驱动器无散热风扇，请做好充分的冷却。驱动器的冷却需要考虑散热器和元器件散热。因此在设计控制柜时，可把散热器置于控制柜外，需设计相应的风道使得有冷风对散热器和元器件进行散热。对元器件进行散热时，需谨防空气流动带来的粉尘、油雾、水滴等异物落到驱动器上，造成器件短路，必要时在空气进气口增加过滤装置。
  This drive is not equipped a cooling fan. Please provide adequate cooling for the driver heat sink and component ensure heat dissipation. Therefore, on the control cabinet design, the heat sink can be placed outside the control cabinet with corresponding air flow needs to be go through the heat sink for heat dissipation. Air flow for heat dissipation must be careful to prevent dust, oil mist, water droplets and other foreign objects from falling on the driver, it will cause short circuit of the device. If necessary, add a filter at air inlet.

## 接线时 During Wiring

**危险 DANGER**

- 严禁非专业人员进行设备安装、接线、保养维护、检查或部件更换！
  Non-professionals are strictly prohibited from equipment installation, wiring, maintenance, inspection or parts replacement!
- 请勿在电源接通的状态下进行接线作业，否则会有触电的危险。
  Do not perform wiring when the power is turned on. Failure to comply may result in electric shock.
- 请遵守静电防止措施（ESD）规定的步骤，并佩戴静电手环进行接线等操作，避免损坏产品内部的电路。
  Follow the ESD precautions and wear EDS wrist strap to avoid damage to the circuit inside the product.

**警告 WARNING**

- 严禁将输入电源连接到设备或产品的输出端，否则会引起设备损坏，甚至引发火灾。
  It is prohibited to connect the input power to the output terminal of the equipment or product; otherwise, the equipment may be damaged or fire may occur.
- 驱动设备与电机连接时，请务必保证驱动器与电机端子相序准确一致，避免造成电机反向旋转。
  When connecting a driving equipment to the motor, be sure that the phase sequence of the driver and the motor terminal are consistent, so as to avoid reverse rotation of the motor.

## 上电时 During Power-on

**危险 DANGER**

- 上电前，请确认设备安装完好，接线牢固。
  Before power-on, be sure the equipment and product are installed properly, the wiring is firm.
- 上电前，请确认电源符合设备要求，避免造成设备损坏或引发火灾！
  Before power-on, be sure the power supply meets the equipment requirements to avoid damage to the equipment or causing fire!
- 严禁在通电状态下触摸设备的任何部位，否则有触电危险！
  It is prohibited to touch any part of the equipment when power is on; otherwise, there is the danger of electric shock!

## 运行时 During Running

**危险 DANGER**

- 严禁在运行状态下触摸设备的任何部位，否则有触电危险！
  It is prohibited to touch any part of the equipment when it is running; otherwise, there is the danger of electric shock!
- 严禁非专业技术人员在运行中检测信号，否则可能引起人身伤害或设备损坏！
  Non-professional technicians are prohibited to detect the signal when the equipment is running; otherwise, there is the danger of personal injury or damage to the equipment!

## 维修时 During Repair

**危险 DANGER**

- 严禁非专业人员进行设备安装、接线、保养维护、检查或部件更换！
  Non-professionals are strictly prohibited from equipment installation, wiring, maintenance, inspection or parts replacement!
- 严禁在通电状态下进行设备维修，否则有触电危险！
  It is prohibited to maintain the equipment when power is on; otherwise, there is the danger of electric shock!
- 切断所有设备的电源后，请至少等待 10 分钟再进行设备检查、维修等操作。
  After the equipment power is cut off, wait for at least 10 minutes before maintaining the equipment or performing other operations.

## 报废时 During Scrapping

**警告 WARNING**

- 请按照国家有关规定与标准进行设备、产品的报废，以免造成财产损失或人员伤亡！
  Scrap the equipment and product according to national regulations and standards to avoid property loss or personal injury!
- 报废的设备与产品请按照工业废弃物处理标准进行处理回收，避免污染环境。
  Recycle scrapped equipment and product according to industrial waste processing standards to avoid pollution to the environment.

# 目录

1 产品主要参数 Product main parameters ..... 8
2 产品部件 Product Assembly ..... 10
3 系统图框 System Diagram (Wiring Diagram) ..... 13
4 接口定义 Interface Definition ..... 14
5 保护功能 Protection Function ..... 15
6 功能描述 Function ..... 19
7 故障代码和故障排查 Error code and trouble shooting ..... 22
8 地址拨码 Address Dial Switch ..... 28
9 安装尺寸 Installation Dimension ..... 29
9.1驱动组件尺寸 Driver board heat sink installation dimension ..... 29
9.2滤波板尺寸Filter board installation dimension ..... 31
9.3电抗器尺寸 Reactor installation dimension ..... 32
10 线径选择 Connection Wire Selection ..... 34
附录 A PCB 丝印图 Appendix A PCB silk screen drawing ..... 36
1) 滤波板 Filter board: ..... 36
2) 驱动板 Driver board: ..... 37

## 1 产品主要参数 Product main parameters

| 型号 Model | | BSQ280B1F2/BSQ280B4/BSQ280B1Y1 | |
|---|---|---|---|
| 输 入 Input | 输入电压 Input voltage | 线电压 380VAC +20%，-15%<br>Line voltage 380VAC , + 20%, -15% | |
| | 输入频率 Input frequency | 50Hz or 60Hz | |
| | 输入电流 Input Current | BSQ280B1F2 | Max. 25A |
| | | BSQ280B4 | Max. 25A |
| | | BSQ280B1Y1 | Max. 31A |
| | 输入功率 input power | BSQ280B1F2 | Max. 15KW |
| | | BSQ280B4 | Max. 15KW |
| | | BSQ280B1Y1 | Max. 17.5KW |
| 输 出 Output | 输出频率 Output frequency | (10～160) rps（根据不同压缩机） | |
| | 载波频率 Carrier frequency | (4～8) KHz | |
| | 输出电流 Output current | BSQ280B1F2 | Max. 32A |
| | | BSQ280B4 | Max. 32A |
| | | BSQ280B1Y1 | Max. 35A |
| | 效率（满载） Efficiency (full load) | ≥ 0.97 | |
| 控 制 特 性 Control characteristics | 控制方式 Control method | 无传感器 SVPWM 正弦波控制、磁场定向控制（FOC）<br>有效减小高次谐波成分、电机振动、转矩波动及噪音<br>Sensorless SVPWM sine wave control, field oriented control (FOC)<br>Effectively reduce higher harmonic components, motor vibration, torque ripple and noise | |
| | 控制策略 Control Strategy | 速度环+电流环双闭环电机控制模型<br>速度环确保输出频率稳定，电流环确保转矩精度<br>Speed loop + current loop dual closed-loop motor control model<br>Speed loop ensures stable output frequency and current loop ensures torque accuracy | |
| | 启动方式 Start way | 0Hz 闭环启动，根据负载自动调整启动转矩<br>0 压差启动时，启动电流小，无冲击电流，有效保护压缩机<br>0Hz closed-loop start up, automatically adjust the starting torque according to the load | |
| | 最小电流 Minimum current<br>最大转矩控制 Maximum torque control | 有效利用压缩机凸极特性产生的磁阻转矩，减小压缩机和 IPM 功率器件损耗，提升系统效率<br>Effectively utilize the reluctance torque generated by the salient pole characteristics of the compressor, reduce the losses of the compressor and IPM power devices, and improve system efficiency | |

| | | |
|---|---|---|
| | 弱磁控制<br>Field weakening control | 有效提高压缩机的频率运行范围<br>Effectively increase the frequency operating range of the compressor |
| 通讯<br>Communication | 接口<br>Interface | 异步半双工（RS-485）<br>Asynchronous Half Duplex (RS-485) |
| | 协议<br>Protocol | MODBUS RTU |
| 结构<br>Structure | 冷却方式<br>Cooling method | 风冷或液冷<br>Air or Liquid cooling |
| 环 境 特 性<br>Environmental characteristics | 储存温度范围<br>Storage temperature range | -40℃ ~ 85℃ |
| | 工作温度范围<br>Range of working temperature | -35℃ ~ 60℃ |
| | 工作湿度范围<br>Operating humidity range | 10% ~ 95%（无结霜和凝露）<br>10% ~ 95% (No frost and condensation) |
| | 使用海拔高度<br>Use altitude | 1000m以下不降额，1000m以上每上升100m降额1%，最高使用海拔为4000m<br>Below 1000m, the rating will not be reduced. For every 100m increase above 1000m, the rating will be reduced by 1%. The maximum altitude for use is 4000m |

## 2 产品部件 Product Assembly

本变频驱动是以组件出货，驱动板组件包括驱动板、散热器和安装固定板等。

The driver product is one set of assembly components including driver board, and driver board is a package with heat sink.

备注：该驱动需搭配S300100103滤波板DSL280A1使用；电抗器由客户选配,推荐型号S34020005电抗器1.88mH/35A，S30020034电抗器1.5mH/40A搭配BSQ280B1F2驱动。

Remarks: The driver board needs to be used in conjunction with S300100103 filter board DSL280A1 ;The reactor is selected by the customer，recommended model S34020005 Reactor 1.88mH/35A，S30020034 Reactor 1.5mH/40A with BSQ280B1F2 drive。

| **组件编码**<br>**Component code** | **组件型号**<br>**Component model** | **数量**<br>**Quantity** |
|---|---|---|
| S30020082 | 驱动板组件 BSQ280B1F2<br>Driver board assembly BSQ280B1F2 | 1 |
| S30020141 | 驱动板组件 BSQ280B4<br>Driver board assembly BSQ280B4 | 1 |
| S30020072 | 驱动板组件 BSQ280B1Y1<br>Driver board assembly BSQ280B1Y1 | 1 |
| S300100103 | 滤波板 DSL280A1<br>Filter board DSL280A1 | 1 |
| S300100525 | 滤波板 DSL280A2,低泄漏电流<br>Filter board DSL280A2,Low leakage current | 1 |
| S34020005 | 电抗器 1.88mH/35A<br>Reactor 1.88mH/35A | 1 |
| S34020034 | 电抗器 1.5mH/40A（搭配BSQ280B1F2驱动）<br>Reactor 1.5mH/40A（Paired with BSQ280B1F2 driver） | 1 |
| S11250001 | 支撑柱(上)（用于支撑滤波板）<br>Support column(Upper)Used to support the filter board | 4 |
| S11250002 | 支撑柱(下)（用于支撑滤波板）<br>Support column(Lower)Used to support the filter board | 4 |
| S3321000210 | 485通讯线（四芯）<br>485 communication line (fourcore) | 1 |

表 1 驱动套件清单

Table 1　Driver assembly components list

| 驱动型号<br>Driver model | 尺寸<br>Dimension | 输出电流<br>output<br>Current | 是否有STO功能<br>Is there a STO function | 反馈电流有效值<br>Feedback current effective value | 其他备注 |
|---|---|---|---|---|---|
| BSQ280B1F2 | H * W *D = 244 * 200 *149）mm | Max.32A @ 380VAC | 否<br>No | 实际值*10<br>Actual value*10 | |
| BSQ280B4 | H * W *D = (244 * 200 *149）mm | Max. 32A @ 380VAC | 是<br>yes | 实际值*10<br>Actual value*10 | |
| BSQ280B1Y1 | H * W *D = (260 * 210 *83)mm | Max.35A @ 380VAC | 否<br>No | 实际值*10<br>Actual value*10 | |

本变频驱动采用磁场定向控制技术（FOC）、电压空间矢量控制技术（SVPWM）、最小电流最大转矩控制技术（MTPA）、弱磁控制技术（Flux Weakening）等先进控制技术，可驱动直流变频压缩机；谐波抑制采用无源直流母线电抗器抑制方式。

The driver is available for DC inverter compressor via Field Oriented Control (abbreviated to FOC), Space Voltage Vector Pulse Width Modulation (abbreviated to SVPWM), Maximum Thrust Per Ampere (abbreviated to MTPA), Flux Weakening Magnetic Control and other advanced control technology. Harmonic suppression is applied via passive DC bus reactor

变频器采用集成设计，有利于提高可靠性及减少安装尺寸。整套产品包括：驱动板组件、滤波板和电抗器。如图 1 所示：

High reliability and space saving, thanks to compact and integration design. The DC inverter driver product we supplied including driver board, filter board, reactor. In picture 1



图 1 变频器外形图

Picture 1 Driver appearance

## 3 系统图框 System Diagram (Wiring Diagram)

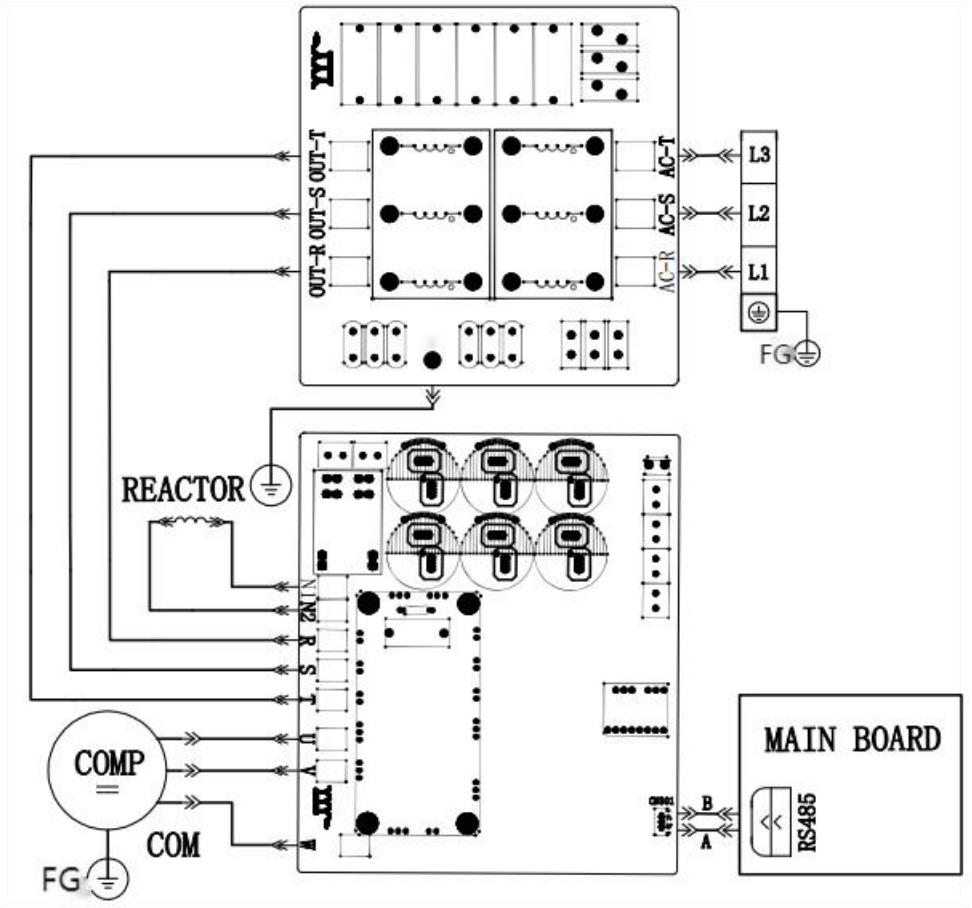


图 2 系统框图(接线图)

Diagram 2 System Diagram (Wiring Diagram)

# 4 接口定义 Interface Definition

| 丝印名称<br>Silk-screen Icon | 端子<br>Interface | 功能描述<br>Description |
|---|---|---|
| **FG** | 滤波板地线输出<br>Filter board ground wire output | 滤波板地线，接电器盒钣金，要确保可靠接地<br>Filter board ground wire, connect to metal |
| **R** | 驱动板火线 R 相输入<br>Live wire R input on driver board | 连接滤波板 OUT - R 接口<br>Connected to OUT - R interface on filter board. |
| **S** | 驱动板火线 S 相输入<br>Live wire S input on driver board | 连接滤波板 OUT - S 接口<br>Connected to OUT - S interface on filter board. |
| **T** | 驱动板火线 T 相输入<br>Live wire T input on driver board | 连接滤波板 OUT - T 接口<br>Connected to OUT - T interface on filter board. |
| **N1** | 直流母线电抗器接口<br>DC bus reactor interface | 接直流母线电抗器，无极性<br>Connected to DC bus reactor, non-polarity. |
| **N2** | 直流母线电抗器接口<br>DC bus reactor interface | 接直流母线电抗器，无极性<br>Connected to DC bus reactor, non-polarity. |
| **U、V、W** | 压缩机输入接口<br>Compressor input interface | 接压缩机，注意不允许接错线，否则会损坏压缩机<br>Connected to compressor U、V、W one by one, |
| **CN301**<br>**CN302** | 4 8 5通信接口<br>(GND、A、B、VCC)<br>引脚顺序4、3、2、1<br>RS485 communication interface<br>(GND, A, B, VCC)<br>Pin order4、3、2、1 | 隔离通讯方式，可无需上位机提供电源，上位机只需提供 485 接口 A、B，注意上位机不需要做隔离。<br>Isolation communication method, which does not require the upper computer to provide power, the upper computer only needs to Provide 485 interfaces A and B, note that the upper computer does not need to be isolated. |
| **CN102**<br>**CN103** | 18V GND端子<br>( 18V GND)<br>引脚顺序2 、1<br>18V GND terminal<br>( 18V GND)<br>Pin order 2、1 | 18V和GND供电端子<br>18V and GND power supply terminals |
| **CN501** | 直流母线端子<br>引脚顺序2 、1<br>DC bus terminal<br>Pin order 2、1 | 直流母线供电端子，支持10A以内电流<br>DC bus power supply terminal, supporting currents up to 10A |

表 2 变频驱动接口定义

Table 2 Driver Board Interface Definition

# 5 保护功能 Protection Function

| 保护功能<br>Protection Function | 功能介绍<br>Function Introduction | 保护方法<br>Protection Method |
|---|---|---|
| 压缩机过流保护<br>Compressor over current protection | Ⅰ.当因系统堵、压力过高、电压瞬间跌落等因素造成压缩机绕组瞬间电流过大时，会导致压缩机转子磁钢退磁，造成压缩机损坏，需停机保护<br>I. If instantaneous winding current of compressor rotor is over large due to system block, excessive pressure, instantaneous voltage drop etc., it will cause degaussing of compressor rotor and compressor damage, shutdown protection and warning are necessary.<br>Ⅱ.当因压缩机磨损、缺油、退磁、回液等因素造成压缩机电流过大时，有可能造成烧坏驱动板，需保护预警<br>II. If compressor current is over large due to compressor abrasion, oil-absent, demagnetization, liquid return and other factors, it may cause driver board burnout, shutdown protection and warning are necessary. | 驱动板检测到压缩机相电流超过0.8*退磁保护值（瞬时值），停机保护，<br>Compressor phase instantaneous current is detected exceed 0.8* Demagnetizing Protection Value (instantaneous value), shutdown protection happen.<br>不同的压缩机，过电流会根据压缩机特性不同而有所区别<br>The overcurrent value will vary according to the characteristics of the compressor. |
| IPM 模块保护<br>IPM module protection | Ⅰ.当因系统堵、压力过高、电压瞬间跌落等因素造成压缩机绕组瞬间电流过大或者 IPM 模块出现短路时，会导致压缩机转子磁钢退磁或者烧坏 IPM 模块，需停机保护<br>I. If instantaneous winding current of compressor is over large or IPM module is short circuit due to system block, excessive pressure, and instantaneous voltage drop etc., it will cause the compressor rotor demagnetization or IPM module burnout, shutdown protection and warning are necessary.<br>Ⅱ.当因压缩机磨损、缺油、退磁、回液等因素造成压缩机电流过大时，有可能造成烧坏驱动板，需保护预警<br>II. If compressor current of compressor is over large due to compressor abrasion, system block, oil-absent, demagnetization, liquid return etc., it may causes drive board burnout, shutdown protection and warning are necessary. | 驱动板检测到 IPM 模块瞬间电流超过 0.9*退磁保护值（瞬时值），停机保护<br>If IPM instantaneous current of driver is exceed 0.9* Demagnetizing Protection Value (instantaneous value), shutdown protection happen. |

| | | |
|---|---|---|
| 主控与驱动通讯故障<br>Communication malfunction between host device (main controller) and driver board | 当主控与驱动之间的通信电路发生异常时会导致驱动板收不到数据或者收到的数据不正确；或者当主控发送的数据错误时，驱动板报相应通信故障<br>If an abnormality occurs in the communication circuit between the main control and the driver, the driver board cannot receive data or receive incorrect data, or main controller sends wrong data, driver board reports a corresponding communication malfunction. | 驱动板连续 30s 没有收到上位机的点名数据或收到不符合通讯协议规定的数据，保护提示<br>Driver board continuously 30s receives nothing of roll call data from host device (main controller) or inconsistent data according to protocol, protection happen and warning. |
| 直流母线过电压保护<br>DC bus voltage over high protection | 当因电源异常，雷击，浪涌等因素引起直流母线电压过高时，会造成驱动板上的功率器件过电压而烧坏，需停机保护<br>If the DC bus voltage is over high due to power supply abnormality, lightning strike, surge and other factors, it will cause the power component on the driver board overvoltage burnout, shutdown protection and warning are necessary. | 任何时候，驱动板检测到直流母线电压超过 750V 时，保护提示<br>Whenever the driver board detects DC bus voltage over high (750V), protection happen and warning. |
| 直流母线欠电压保护<br>DC bus voltage over low protection | 当电源电压瞬间跌落，而压缩机负载不能瞬间突变时，驱动板输入/输出电流会瞬间冲高，可能会烧坏功率器件或者造成压缩机退磁，需停机保护<br>If power supply voltage drop instantaneously but the load of the compressor cannot be changed so fast, the input / output current of the driver board will be go high instantly, it may cause power component burnout or compressor demagnetization, shutdown protection and warning are necessary. | 在压缩机运行时，驱动板检测到直流母线电压低于 360V 时，停机保护<br>Under compressor running, the driver board detects DC bus voltage over low (360V), protection happen and warning. |
| 压缩机失步保护<br>Compressor non-synchronism protection | 当出现系统堵、压力过高或者压缩机磨损、缺油、退磁、回液等因素时，会造成压缩机运行转速与驱动板目标转速出现不同步（失速），以及进一步出现压缩机过流和 IPM 模块保护，需停机保护<br>If system block, over high pressure, compressor abrasion, oil-absent, demagnetization, liquid return and other factors occur, it will cause the compressor running speed out of sync with drive board target speed (stall), and further cause compressor overcurrent and IPM module protection, shutdown protection and warning are necessary. | 驱动板连续两秒检测到实际运行频率与目标设定频率相差 10Hz（电频率）时，停机保护<br>Driver board detect continuously 2s running frequency deviates from setting frequency by 10Hz (electric frequency), protection happen and warning. |

| | | |
|---|---|---|
| 压缩机启动失败<br>Compressor startup failure | 当出现系统堵、压力过高或者压缩机磨损、缺油、退磁、回液等因素时，会造成压缩机不能正常启动，需停机保护<br>If system block, over high pressure, compressor abrasion, oil-absent, demagnetization, liquid return and other factors occur, it will cause the compressor startup failure, shutdown protection and warning are necessary. | 驱动板收到开机指令进入启动阶段后，转速连续 10s 未达到目标设定转速时，停机保护<br>After driver board receive startup command and enter into start-up state, continuously 10s compressor running speed unable reach setting speed, protection happen and warning. |
| 电流检测电路故障<br>Current sensing circuit protection | 当检测压缩机电流的电路出现异常时，会出现压缩机转速波动、噪音大、振动大、压缩机过流等，需保护预警<br>When an abnormality occurs in the circuit for detecting the compressor current, compressor speed fluctuations, high noise, large vibration, and compressor overcurrent will occur, which requires protection and early warning. | 驱动板收到开机指令后检测到压缩机电流检测电路异常时，保护提示<br>Compressor current sensing circuit is detected abnormal after driver board receives startup command, protection happen and warning. |
| 充电回路故障<br>Charging circuit malfunction | 驱动板直流母线充电时，需要增加缓冲电路，以防止充电冲击电流过大而烧坏器件。当充电缓冲电路故障时，会导致直流母线无法正常充电，需保护预警<br>In the process of driver board DC bus charging, it is need to add a buffer circuit to prevent components burnout due to over high charging impulse current. If the charging buffer circuit is malfunction, it will causes the DC bus charging failure, shutdown protection and warning are necessary. | 驱动板收到开机指令后，执行直流母线电路充电步骤，当连续充电两次后检测母线电压都没达到 380V，则认为充电回路异常，保护提示。<br>Driver board enter into the DC bus circuit charging process after receiving startup command, and continuously twice detect bus voltage low than 380V, charging circuit abnormal, protection happen and warning. |
| IPM 温度传感器故障<br>IPM temperature sensor malfunction | 当检测 IPM 模块温度的电路异常时，无法检测到准确的 IPM 模块温度，无法通过温度对压缩机进行限频、降频和保护等动作，需保护预警。<br>If IPM temperature sensor abnormal is detected, the accurate temperature of IPM module cannot be detected, it is fail to control compressor frequency limit, frequency reducing and protection by temperature, shutdown protection and warning are necessary. | 驱动板收到开机指令后，检测到压缩机 IPM 模块温度检测电路出现短路或者断路等，保护提示。<br>Compressor IPM temperature sensor circuit is detected short or open circuit, after driver board receives startup command, protection happen and warning. |

| | | |
|---|---|---|
| IPM 过温保护<br>IPM overheat protection | 当 IPM 模块温度过高时，会导致驱动板 IPM 模块烧坏，需停机保护。<br>If temperature of IPM module is over high, it will cause driver board IPM module burnout, shutdown protection and warning are necessary. | 任何时候，驱动板检测到压缩机模块温度大于 100℃时，保护提示。<br>Whenever driver board detect compressor IPM module temperature higher than 100℃, protection happen and warning. |
| 压缩机型号错误<br>Compressor model code error | 开机前，主控需把所选用的压缩机代号发给驱动板，驱动板根据代号读取相应压缩机的参数。当发过来的压缩机代号与所选用功率等级的驱动板所储存的压缩机代号不一致时，说明驱动板与压缩机不匹配或者驱动板暂未支持此型号压缩机<br>Before startup, main control (host device) needs to send the selected compressor code to driver board, and drive board reads the corresponding compressor parameters. If the compressor code is sent by main control (host device) is not match the one of compressor code stored in the driver board, it means that the driver board and compressor are unmatched, or driver board cannot support the compressor yet. | 压缩机启动前，驱动板接收到与本身储存 的压缩机代号不一致时，保护提示<br>Before starting thecompressor, if the driver board receives the inconsistent of the compressor code in store, protection happen and warning. |

表 3 保护功能

Table 3 Protection Function

# 6 功能描述 Function

## 6.1 待机 Standby

驱动板得电后，芯片电源指示灯 D413（橙色）亮，此时严禁用手接触驱动板上的任何部件。随后芯片进入得电复位状态，状态显示双 8 数码管 LED1 显示 OF，随后在无故障前提下，驱动板进入待机状态。

After driver board is powered on, the chip power indicator light D413 (Red) is bright, DO NOT touch any component on board.

Then the chip go into reset state, status digital display LED1 display the code OF, if no error happen, the driver board go into standby mode.

## 6.2 PFC 的控制 PFC control

驱动板整流部分采用的是无源被动 PFC，采用电抗器对直流母线谐波进行抑制，从而提高功率因数。

Rectification section of driver board is applied by passive PFC, Harmonic suppression is applied via passive DC bus reactor to increase the power factor.

## 6.3 压缩机的控制 Compressor Control

基本思想：接收上位机的开机指令和设定频率后，使压缩机运行在设定频率内。接收到上位机关机指令后，停止压缩机。当检测到故障后，无论之前压缩机处于何种状态均停止压缩机运行，状态显示双 8 数码管 LED1 显示相应故障代码，直到故障消除。

Basic logic: Compressor runs at setting frequency, if driver board receives start and setting frequency command from host device (main controller). Compressor shut down, if driver board receives shut down command from host device (main controller). If the driver board detect malfunction happen, compressor would shut down at any state, status digital display LED1 displays corresponding error codes until the error is cleared.

- 6.3.1 待机及开机启动 Standby and startup

在待机状态时，状态显示双 8 数码管 LED1 显示 OF。收到上位机开机指令和设定频率后，开机启动，状态显示双 8 数码管 LED1 显示 ON。

Under standby mode, status digital display LED1 displays the code OF. If the driver board receives startup command and setting frequency command from host device (main controller), compressor is start and run, status digital display LED1 display the code ON.

- 6.3.2 开机正常运行 Normal running

1）升频速度设置 Frequency increasing speed setting 运行状态：上位机可控，范围值：0.1rps - 3rps (机械频率)，超出范围默认 1rps (机械频率)。 限频状态： 0.5rps(机械频率)。

Running status: control by host device (main controller)
Control range: 0.1rps - 3rps (Mechanical frequency), default speed 1rps (Mechanical frequency) if command is out of range
Frequency limiting state: 0.5rps

2）降频速度设置 Frequency reducing speed setting 运行状态：上位机可控，范围值：0.5rps - 5rps (机械频率)，超出范围默认 2rps (机械频率)。 限频但未进降频状态：同正常运行状态。

限频并进降频状态：2rps (机械频率)。
Running status: control by host device (main controller).
Control range: 0.5rps - 5rps (Mechanical frequency), default speed 2rps (Mechanical frequency) if command is out of range.
Frequency limiting and NO go into forced frequency reducing status: Equivalent to normal operation
Frequency limiting and forced reducing state: 2rps (Mechanical frequency).

3）限降频条件 Frequency limit and forced reducing condition

① 限频控制：当运行状态达到以下任一条件时，限制压缩机频率上升。

a. 检测到压缩机运行电流 ≥ 34A

b. 检测到模块温度 ≥ 90℃

c. 检测到母线电压≤390V

退出限频条件：退出以上条件，并计时 240s 后。

① Frequency limiting control: If the running parameter meets one of the following conditions, compressor frequency is limited against increasing.

a) Compressor running current ≥ 34 A

b) IPM temperature ≥ 90℃

c) DC Bus Voltage ≤390V

Quit condition: Quit from the above condition and maintaining for 240 seconds.

② 降频控制：当运行状态达到以下任一条件时，降低压缩机频率。

a. 检测到压缩机运行电流 ≥ 35 A

b. 检测到模块温度 ≥ 95℃

c. 检测到母线电压≤380V

② Frequency limiting control: If the running parameter meets one of the following conditions, compressor frequency is limited to reduce.

a) Compressor running current ≥ 35 A

b) IPM temperature ≥ 95℃

c) DC Bus Voltage ≤380V

备注：不同的压缩机，限、降频电流会根据压缩机特性不同而有所区别。

Note: Frequency limit and reducing condition will be different according to compressor characteristic.

### 6.4 关机 Turning OFF

收到上位机的停机命令后，驱动关闭压缩机。

详细的停机时序请参见《亚丁主控与变频驱动通信协议》。

Driver board shut down the compressor, if it receives OFF command from host device (main controller).

Detail about shutdown time sequence refers to communication protocol.

### 6.5 故障停机 Malfunction Shutdown

运行过程出现任何驱动故障时，都会立即停压缩机，关闭 PWM 输出，显示当前故障指示灯。不管此时主控发何指令都进入故障待机状态。

Driver board will shut down compressor immediately, shut down PWM output at the same time, if any malfunction happen in running state, display error code. Unit will go into malfunction standby state, whatever command is sent from host device (main controller).

# 7 故障代码和故障排查 Error code and trouble shooting

运行过程出现任何驱动故障时，都会立即停压缩机，状态显示双 8 数码管 LED1 显示相应故障代码。具体内容参考下表 4。

If any malfunctions happen in running status, driver board will shut down compressor immediately. Driver board status digital display LED1 will display corresponding error codes. Malfunction information show in following table.

## 7.1 故障代码 Error code

| **正常模式**<br>**Normal running status** | **双 8 数码管**<br>**Status digital display** |
|---|---|
| 复位模式 Reset mode | **OF** |
| 待机模式 Standby mode | **OF** |
| 运行模式 Running mode | **ON** |

| **故障类型**<br>**Malfunction type** | **双 8 数码管**<br>**Status digital display** |
|---|---|
| 压缩机过流保护<br>Compressor over current protection | **H0** |
| IPM 模块保护<br>IPM module protection | **H1** |
| 主控与驱动通讯故障<br>Communication malfunction between host device (main control) and driver | **H2** |
| 直流母线过电压保护<br>DC bus voltage over high protection | **H5** |
| 直流母线欠电压保护<br>DC bus voltage over low protection | **H6** |
| 压缩机失步保护<br>Compressor non-synchronism protection | **H7** |
| 压缩机启动失败<br>Compressor start failure | **H8** |
| 压缩机电流检测电路故障<br>Compressor current detection circuit failure | **H9** |
| 充电回路故障<br>Charging circuit malfunction | **HA** |
| IPM 温度传感器故障<br>IPM temperature sensor malfunction | **HH** |
| IPM 过温保护<br>IPM overheat protection | **HC** |
| 压缩机型号错误<br>Compressor model code error | **HH** |

表 4　故障类型及指示
Table 4　Error code and definition

## 7.2 故障排查 trouble shooting

- 7.2.1 压缩机过流保护，IPM 模块保护，压缩机失步保护，压缩机启动失败

Compressor over current protection, Compressor IPM module protection, Compressor non-synchronism protection, Compressor start failure

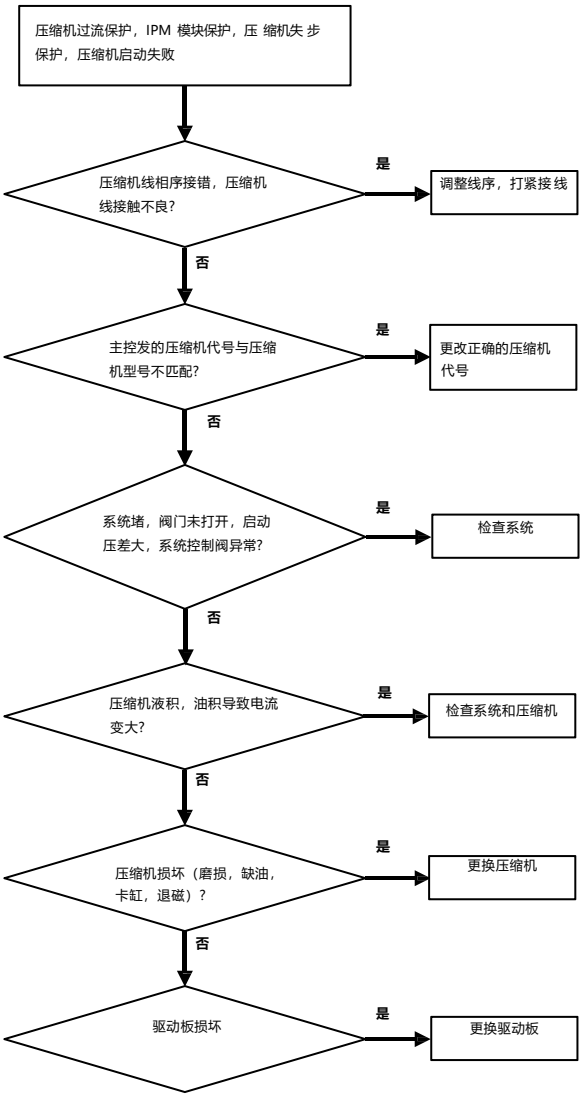


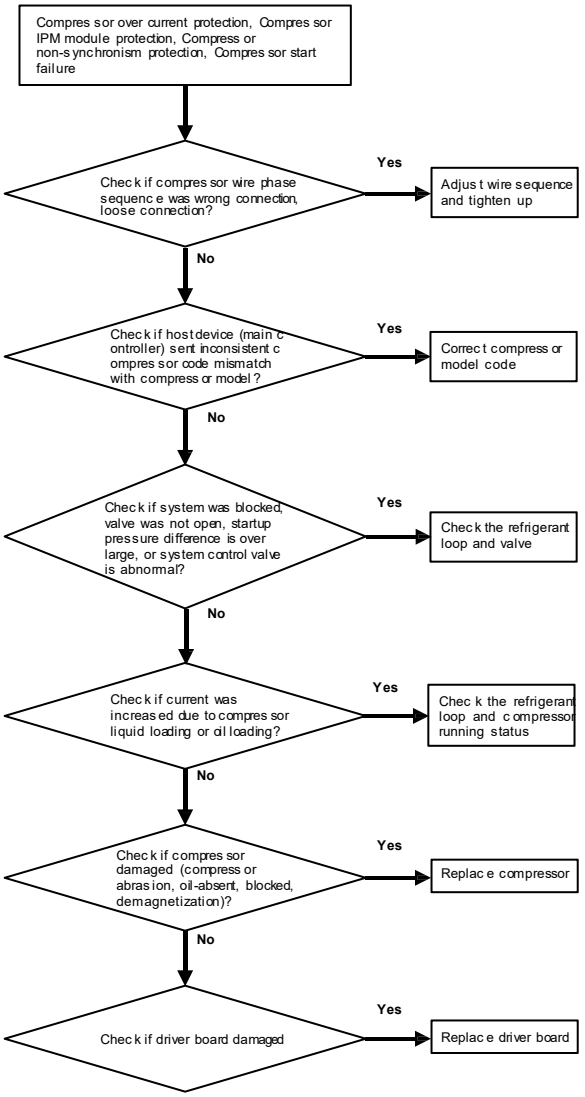

- 7.2.2 主控与驱动通讯故障

Communication malfunction between host device (main control) and driver

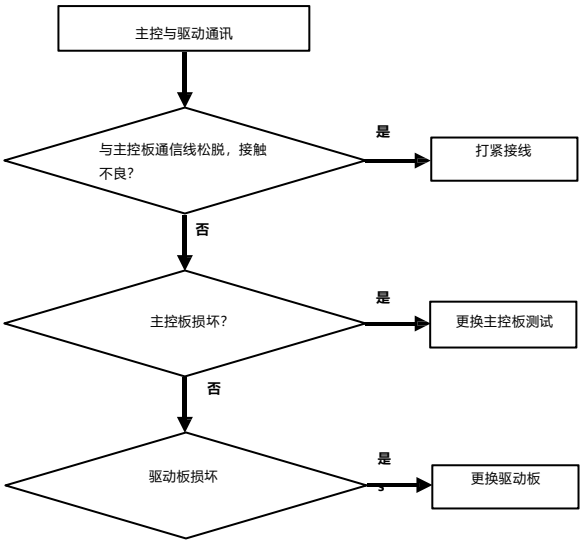


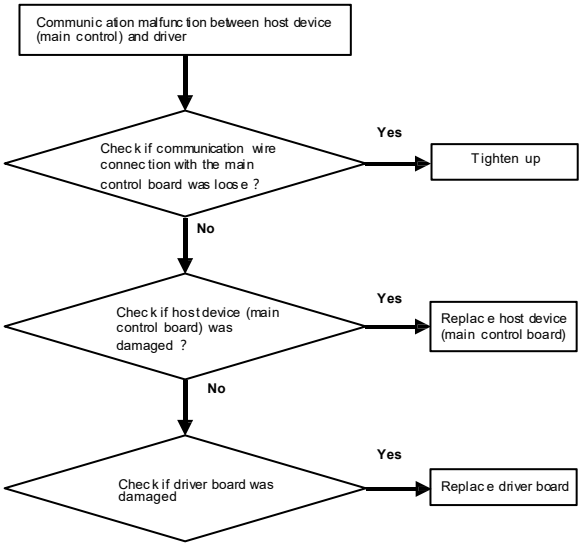


- 7.2.3 直流母线过电压保护

DC bus voltage over high protection

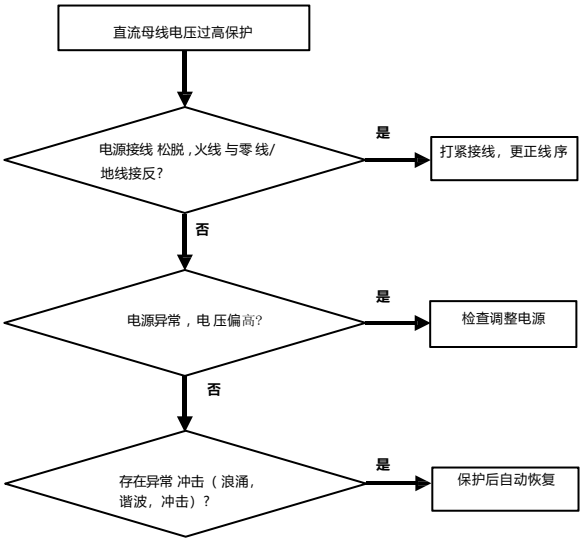


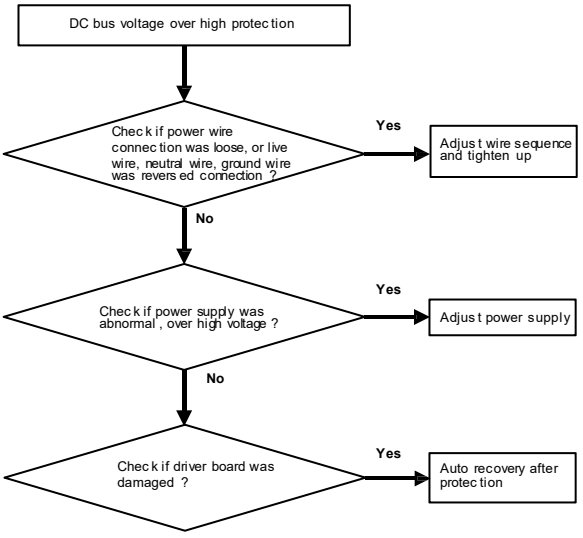

- 7.2.4 直流母线欠电压保护

DC bus voltage over low protection

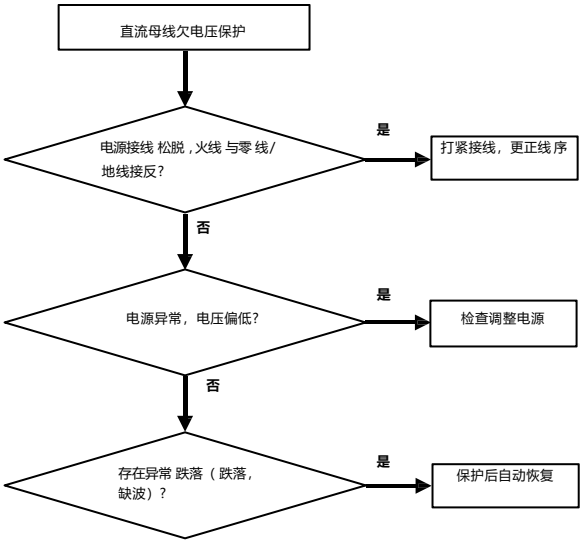


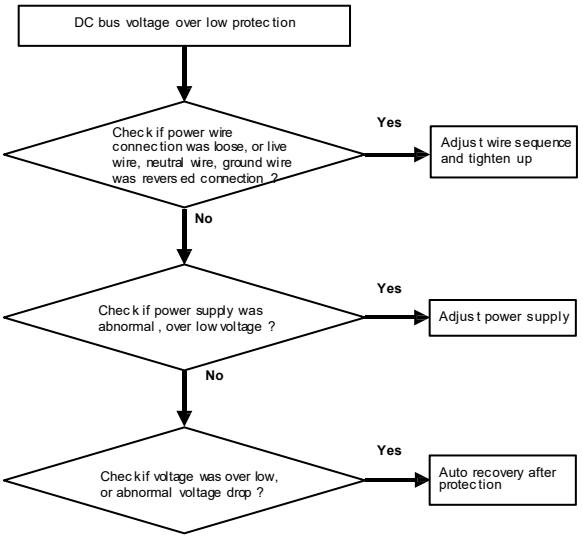


- 7.2.5 压缩机电流检测电路故障

Compressor current detection circuit failure

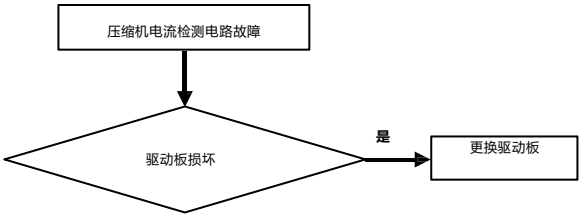


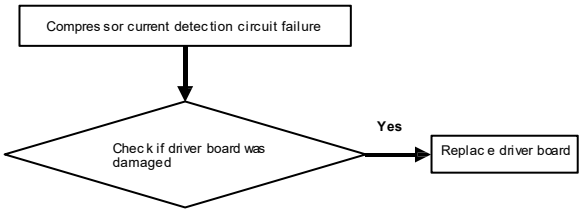


- 7.2.6 充电回路故障

Charging circuit malfunction

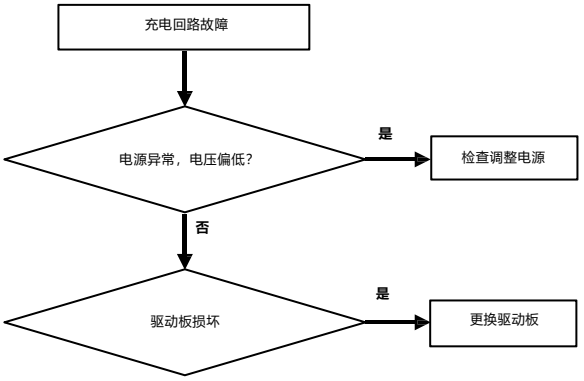


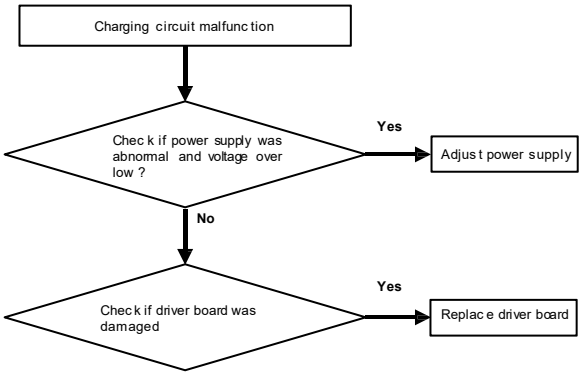

- 7.2.7 压缩机 IPM 温度传感器故障

Compressor IPM temperature sensor malfunction

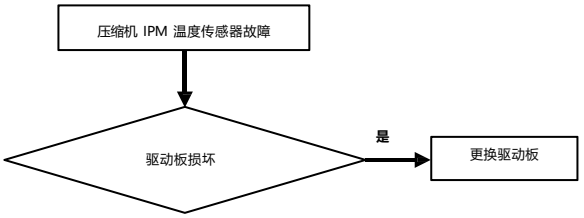


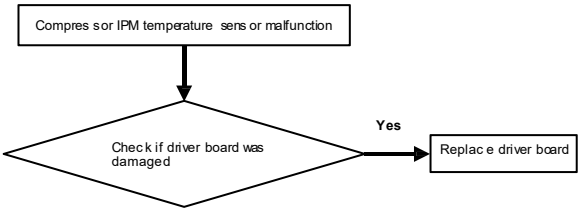


- 7.2.8 压缩机 IPM 过温保护

Compressor IPM overheat protection

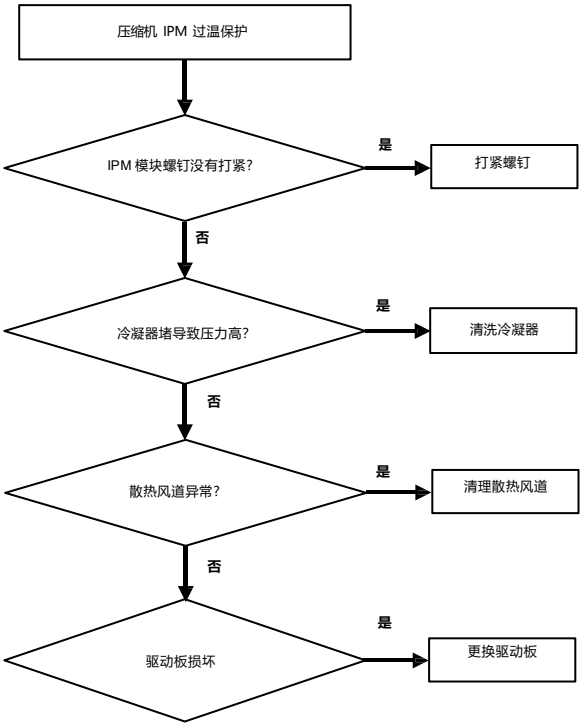


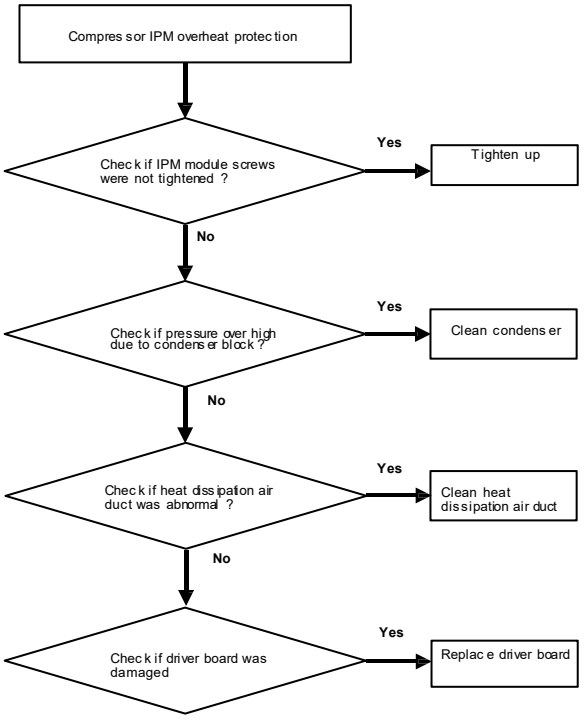

- 7.2.9 压缩机型号错误

Compressor model code error

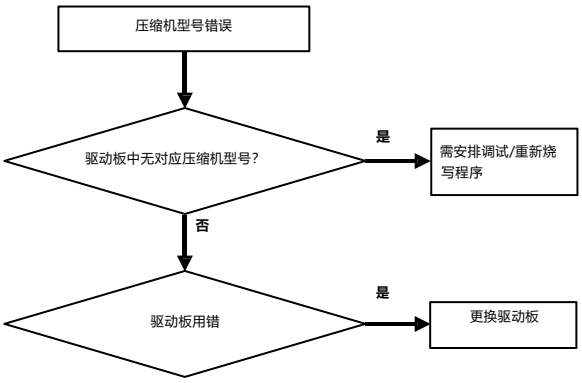


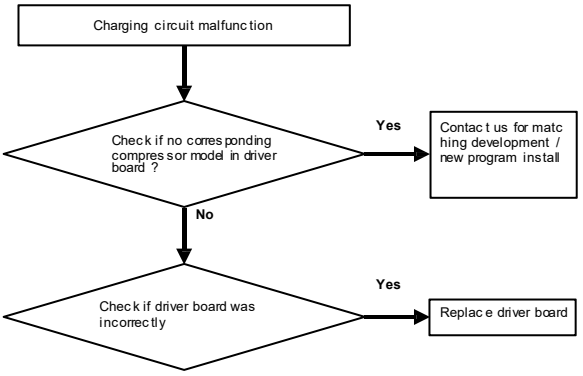

## 8 地址拨码 Address Dial Switch

通过两位地址拨码的不同组合，最大扩展到 4 个设备地址，支持 1 个上位机控制多个驱动板。

Address dial switch by hand set, the driver supports max. 4 drivers controlled by host device (main controller). Address setting in following:




驱动板 1（地址 0B）
Driver 1 (Add. 0B)




驱动板 2（地址 0C）
Driver 2 (Add. 0C)




驱动板 3（地址 0D）
Driver 3 (Add. 0D)




驱动板 4（地址 0E）
Driver 4 (Add. 0E)

# 9 安装尺寸 Installation Dimension

## 9.1 驱动组件尺寸 Driver board heat sink installation dimension

散热器上有 4 个安装定位孔，直接安装在电控盒上：

There are 4 positioning holes on the radiator, which can be directly installed on the electric control box：

BSQ280B4/BSQ280B1F2

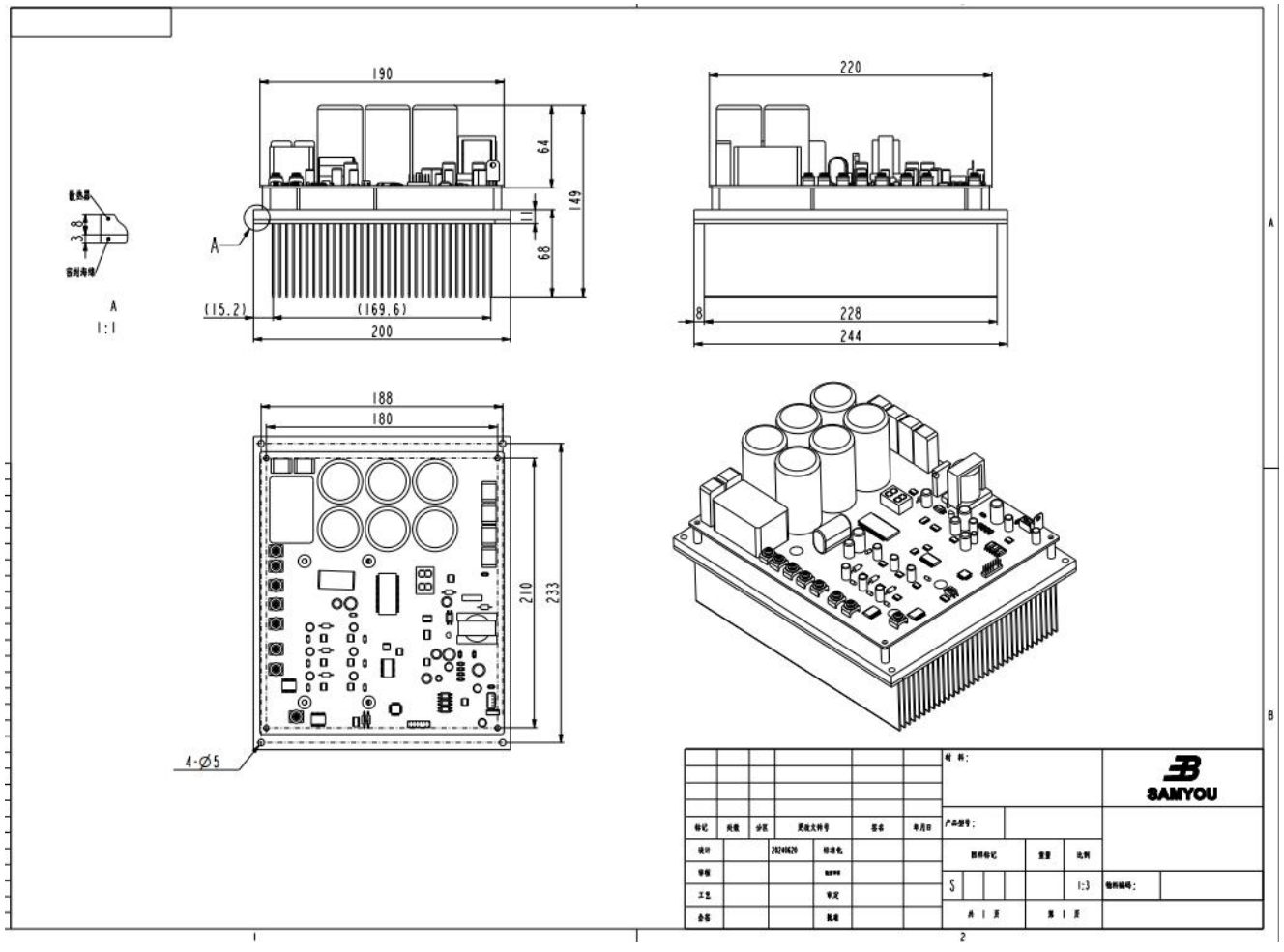

BSQ280B1Y1

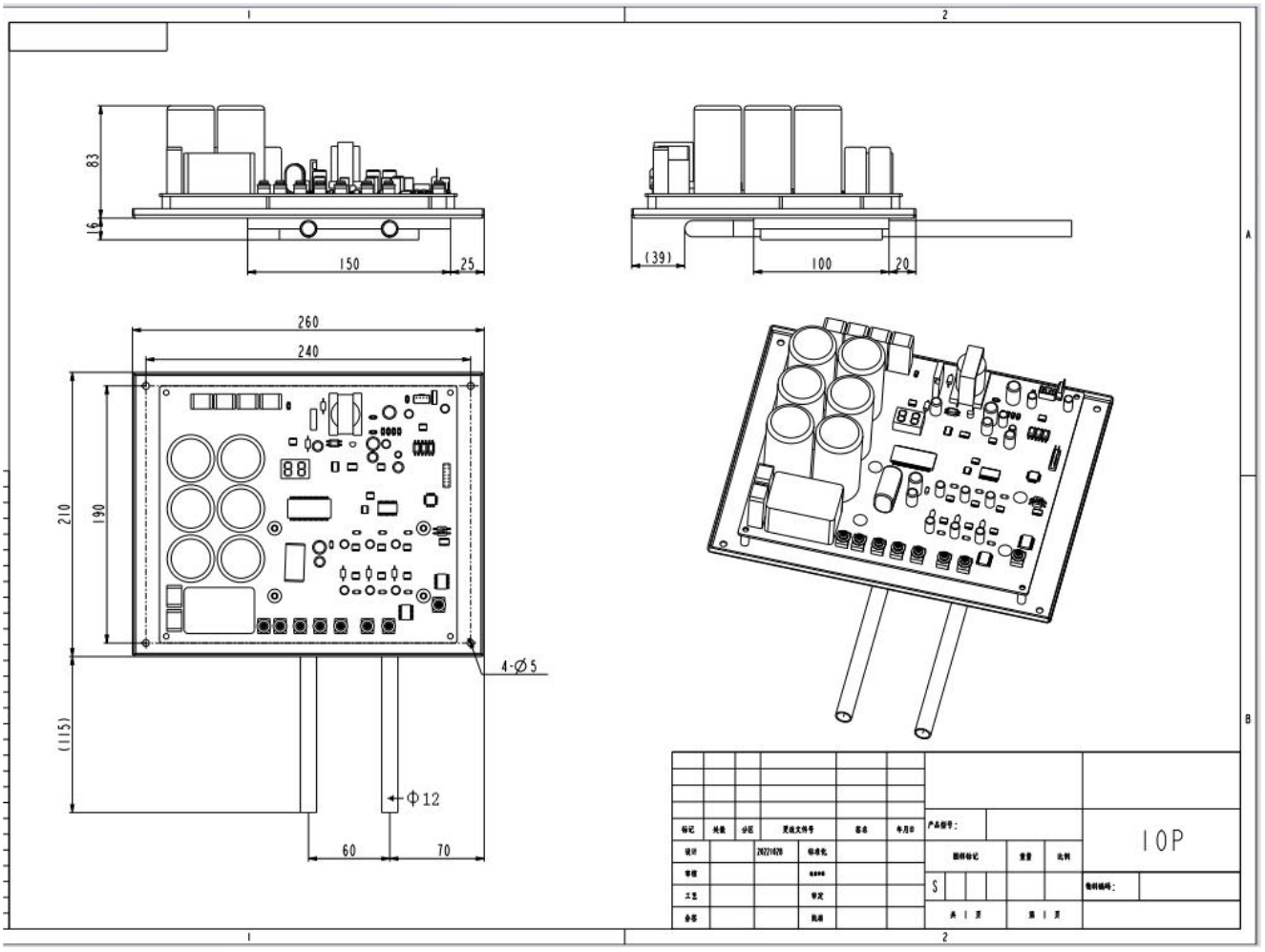


备注：若需驱动组件 3D 图纸，请联系我司。

Note: If you need 3D drawings of drive components, please contact us.

### 9.2滤波板尺寸Filter board installation dimension

板大小为 145*145mm，设计四个安装定位孔，孔间距为135*135mm。

Filter board size 145*145mm, four installation holes pitch 135*135mm.

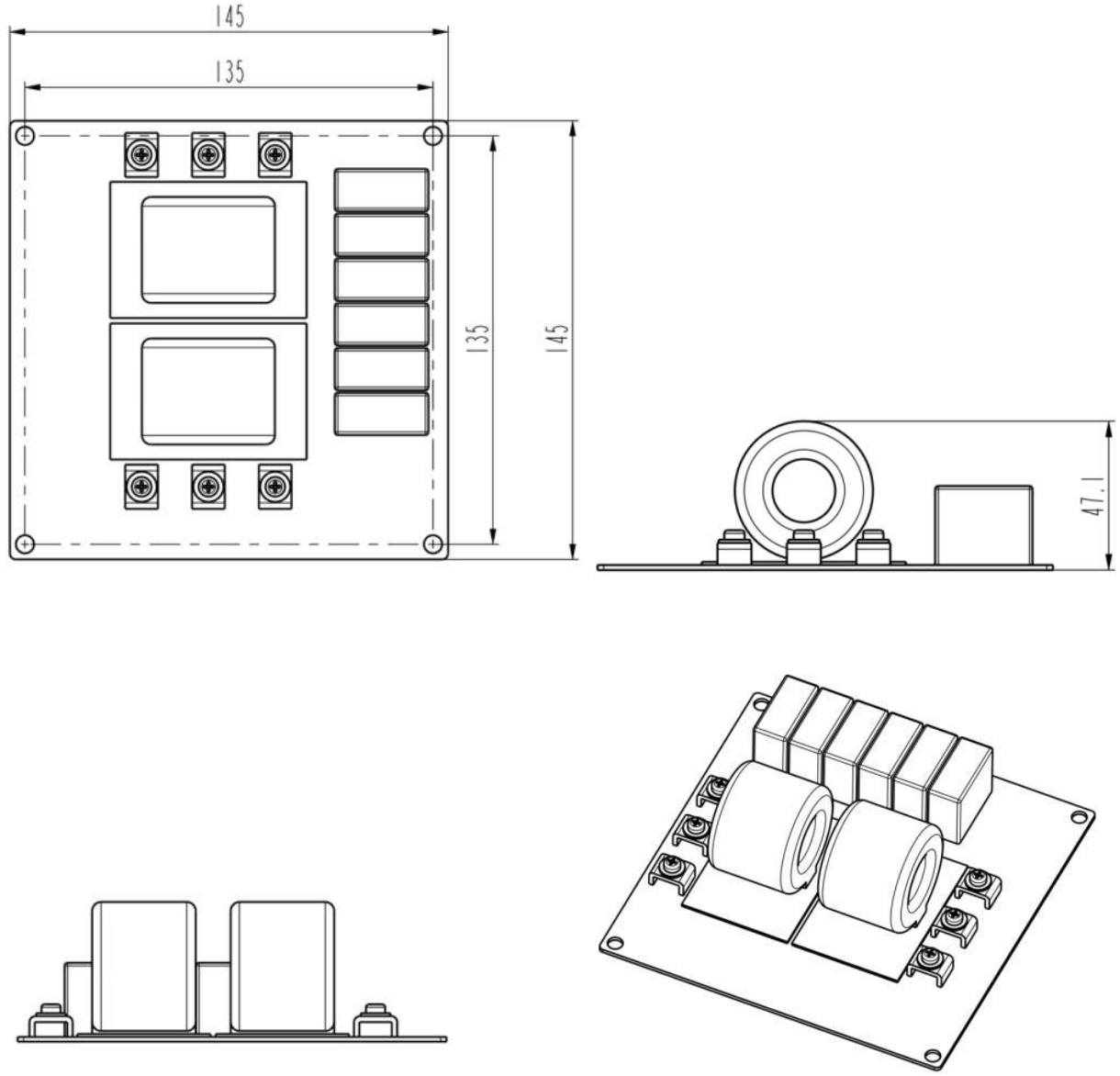


注意：滤波板底部离电器盒钣金件之间的距离要保证至少10mm的安全距离。

可采用我司推荐的固定安装柱。如下图

Note: Ensure the safe distance between filter board and installation metal board more than 10mm.

Plastic supporter is recommended.



9.3 电抗器尺寸 Reactor installation dimension

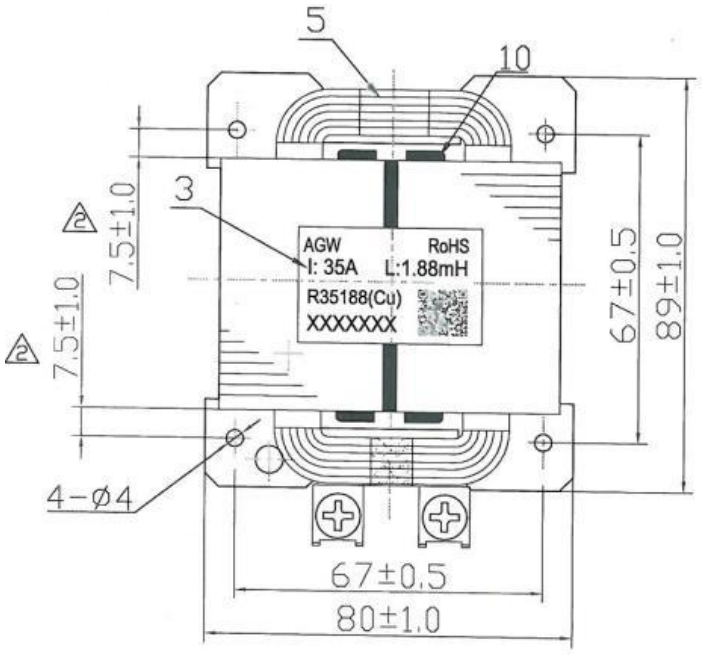


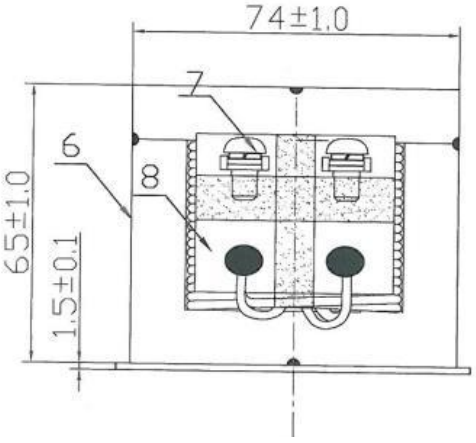


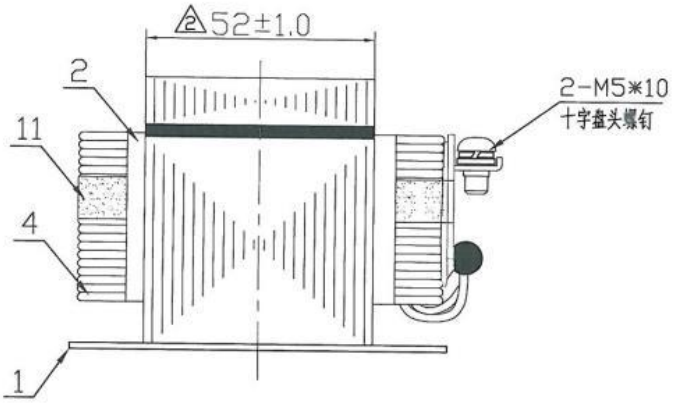

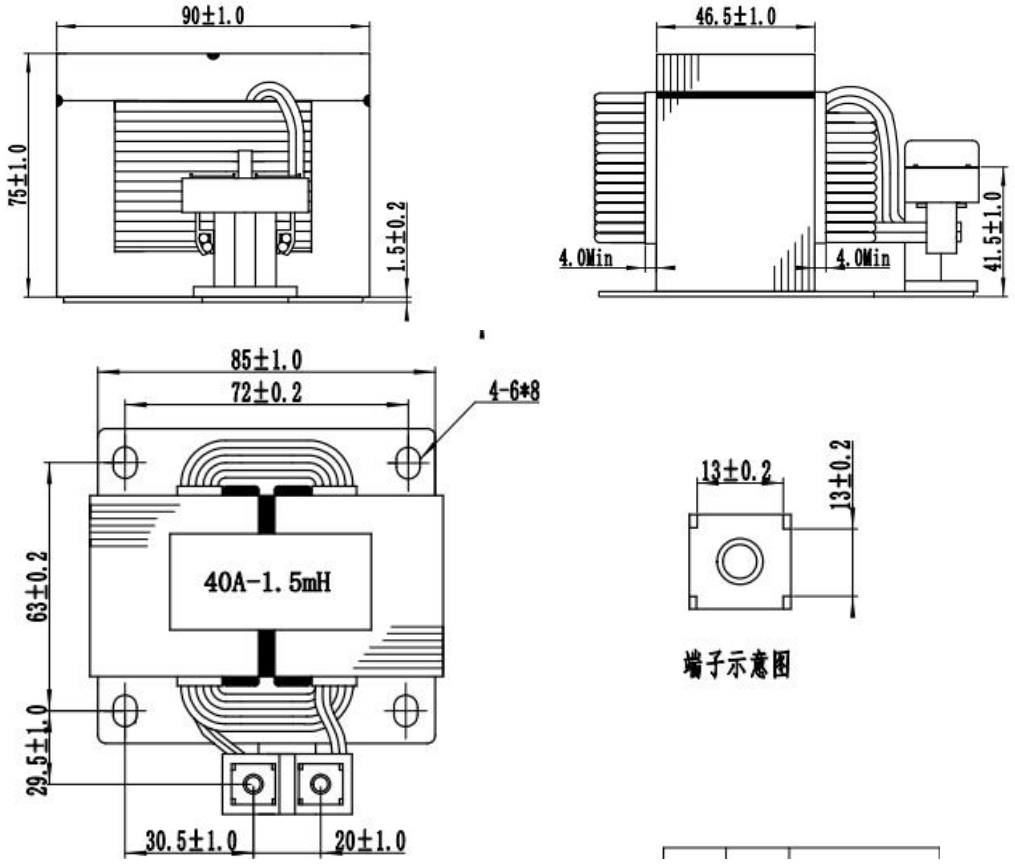


备注：

1. 所有尺寸都不包括绝缘漆。
2. 去除底板孔内的过量绝缘漆。
3. 未注公差：±1.0mm。

Remark:

1. All sizes do not include insulating paint
2. Remove excess insulating paint from the bottom plate holes
3. Unmarked tolerance：±1.0mm

# 10 线径选择 Connection Wire Selection

## 10.1 板间连线及线径选择 Connection wire requirement

导线的阻抗与其长度成正比，与其线径成反比，在使用时，需注意线材与线径的选择。 板间连线推荐使用铜芯线，其线径的选择需要考虑电流值、环境温度等因素，以防止电流过大使导线过热而造成事故。

The impedance of the connection wire is directly proportional to its length and inversely proportional to its diameter. In use, should be attention to the selection of wire material and diameter.

Copper core wires are recommended for connection wire. Current value and ambient temperature should be taken into account in the selection of wire diameter in order to prevent accidents caused by overheating of over current.

| 丝印名称 Silk-screen Icon | 端子 Interface | 线径选择（推荐值） Wire Diameter Recommendation | 备注 Note |
|---|---|---|---|
| **AC - R** | 滤波板火线 R 相输入<br>Live wire R phase input on filter board | (6.0 ~ 8 .0)mm² | 相电流<br>Phase current<br>31A Max @ 220VAC<br>38A Max @ 185VAC<br>端子型号：ACTB011-A（康奈特） |
| **AC - S** | 滤波板火线 S 相输入<br>Live wire S phase input on filter board | | |
| **AC - T** | 滤波板火线 T 相输入<br>Live wire T phase input on filter board | | |
| **OUT - R** | 滤波板火线 R 相输出<br>Live wire R phase output on filter board | | |
| **OUT - S** | 滤波板火线 S 相输出<br>Live wire S phase output on filter board | | |
| **OUT - T** | 滤波板火线 T 相输出<br>Live wire T phase output on filter board | | |
| **FG** | 滤波板地线输出<br>Filter board ground wire output | 线径0.75mm²<br>线长280mm<br>M4接地螺钉 | 滤波板自带地线<br>Filter board comes with ground |
| **R** | 驱动板火线 R 相输入<br>Live wire R input on driver board | (6.0 ~ 8 .0)mm² | 相电流<br>Phase current<br>31A Max @ 220VAC<br>38A Max @ 185VAC |
| **S** | 驱动板火线 S 相输入<br>Live wire S input on driver board | | |
| **T** | 驱动板火线 T 相输入<br>Live wire T input on driver board | | |
| **N1** | 直流母线电抗器接口<br>DC bus reactor interface | (6.0~8.0)mm2 | 最大电流<br>Maximum current 40A<br>端子型号：ACTB011-A（康奈特） |
| **N2** | 直流母线电抗器接口<br>DC bus reactor interface | | |

| | | | |
|---|---|---|---|
| **U、V、W** | 压缩机输入接口<br>Compressor input interface | (6.0~8.0)mm2 | 输出最大电流 36A<br>Output maximum current 36A |
| **CN301**<br>**CN302** | 4 8 5通信接口<br>(GND、A、B、VCC)<br>引脚顺序4、3、2、1<br>RS485 communication interface<br>(GND, A, B, VCC)<br>Pin order4、3、2、1 | 端子型号：XH-4P-K3。推荐使用 26AWG(截面积 0.1281mm2 )电缆，带 2 根导线和一根屏蔽线的绞合铜线。<br>Terminal model: XH-4P-K3. It is recommended to use 26AWG (cross-sectional area 0.1281mm2) cable with twisted copper wire with 2 wires and a shielded wire. | |
| **CN103**<br>**CN104** | 18V GND端子<br>( 18V GND)<br>引脚顺序2 、1<br>18V GND terminal | 端子类型：针座 B2P-VH-AM<br>Terminal type: Pin holder B2P-VH-AM | |
| **CN501** | 直流母线端子<br>引脚顺序2 、1<br>DC bus terminal<br>Pin order 2、1 | 端子类型：针座 B2P3-VH-AM<br>Terminal type: Pin holder B2P3-VH-AM | |

表 6 板间连线及线径选择

Table 6 Connection Wire Diameter

**附表：（仅供参考）Schedule: (For reference only)**

| **线径（大约值）（平方毫米）**<br>**Wire diameter(approximate)**<br>**($mm^2$)** | **铜线温度（摄氏度）**<br>**Cooper wire temperature (℃)** | | | |
|---|---|---|---|---|
| | 60℃ | 75℃ | 85℃ | 90℃ |
| | **电流 Current (A)** | | | |
| 2.5 | 20 | 20 | 25 | 25 |
| 4.0 | 25 | 25 | 30 | 30 |
| 6.0 | 30 | 35 | 40 | 40 |
| 8.0 | 40 | 50 | 55 | 55 |
| 14.0 | 55 | 65 | 70 | 75 |

表 7 铜线在不同的温度下能承受的最大电流

Table 7 Maximum current that copper wires withstand at different temperatures

# 附录 A PCB 丝印图 Appendix A PCB silk screen drawing

### 1) 滤波板 Filter board:

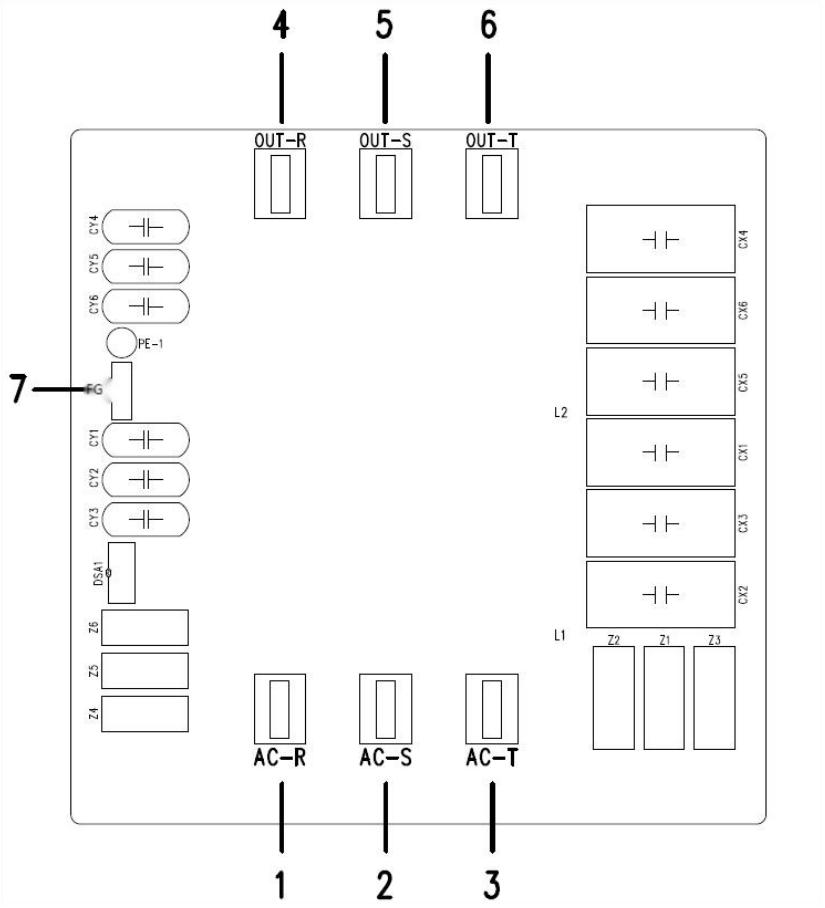


| 序号<br>No. | 名称<br>Name |
|---|---|
| 1 | 滤波板 R 相输入<br>Filter board R-phase input |
| 2 | 滤波板 S 相输入<br>Filter board S-phase input |
| 3 | 滤波板 T 相输入<br>Filter board T-phase input |
| 4 | 滤波板 R 相输出<br>Filter board R-phase input |
| 5 | 滤波板 S 相输出<br>Filter board S-phase input |
| 6 | 滤波板 T 相输出<br>Filter board T-phase input |
| 7 | FG 地线接线端<br>FG ground terminal |

## 2）驱动板 Driver board:

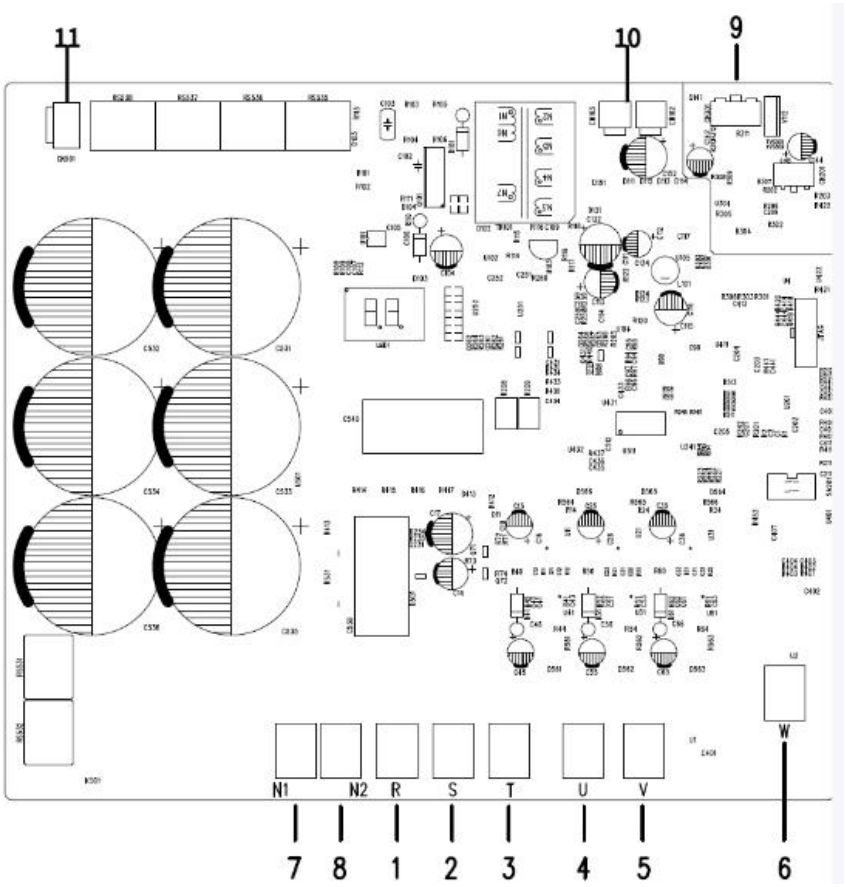


| 序号<br>No. | 名称<br>Name |
|---|---|
| 1 | 驱动板 R 相输入<br>Driver board R-phase input |
| 2 | 驱动板 S 相输入<br>Driver board S-phase input |
| 3 | 驱动板 T 相输入<br>Driver board T-phase input |
| 4 | 压缩机 U 相输出<br>Compressor U-phase output |
| 5 | 压缩机 V 相输出<br>Compressor V-phase output |
| 6 | 压缩机 W 相输出<br>Compressor W-phase output |
| 7 | 电抗器接线端 1<br>Reactor terminal 1 |
| 8 | 电抗器接线端 2<br>Reactor terminal 2 |
| 9 | 驱动板与主控板 485 通讯端子<br>Driver board and main control board 485 communication terminal |
| 10 | 18V和GND端子<br>18V and GND terminal |
| 11 | 直流母线端子<br>DC bus terminal |